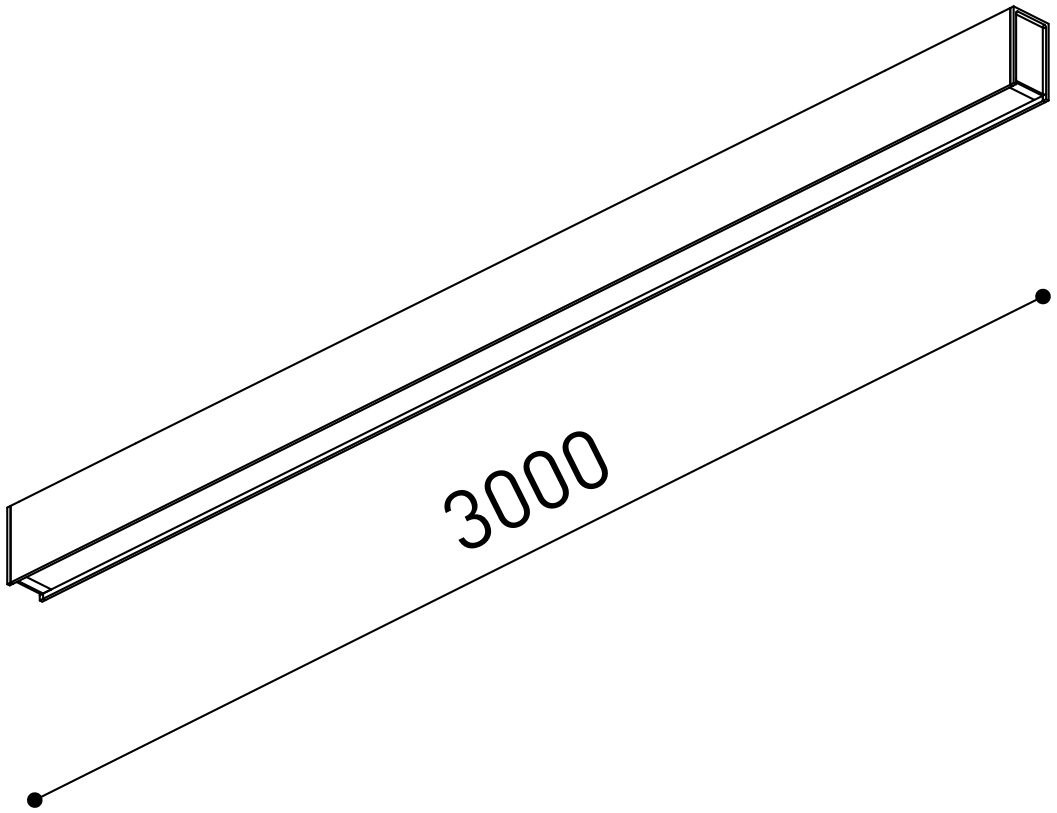
3000

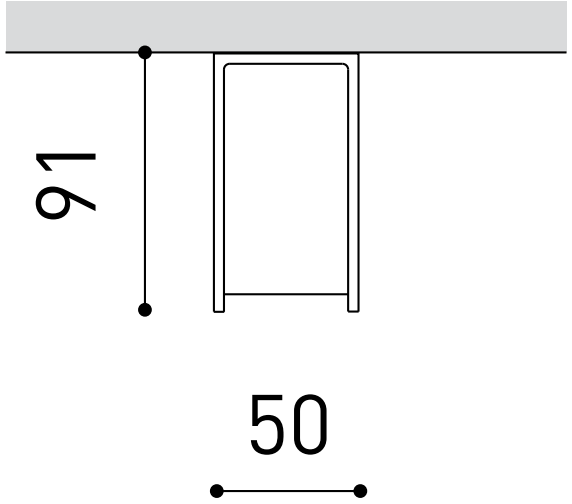
91
50