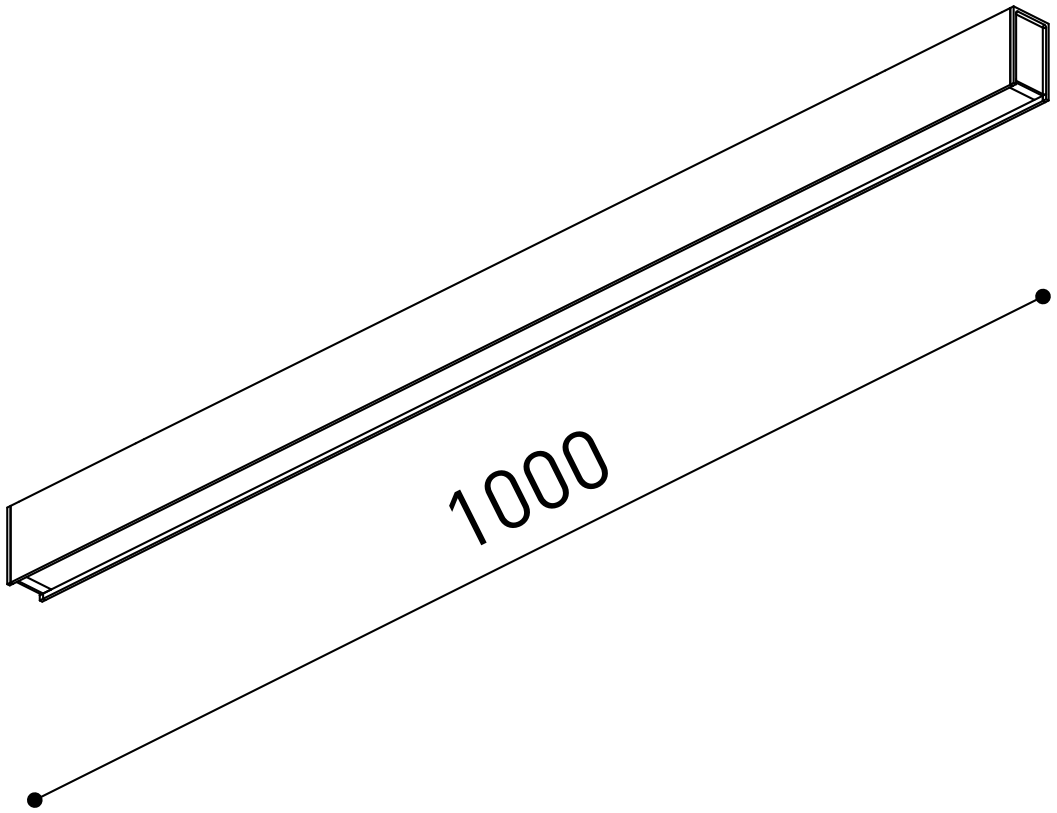
1000

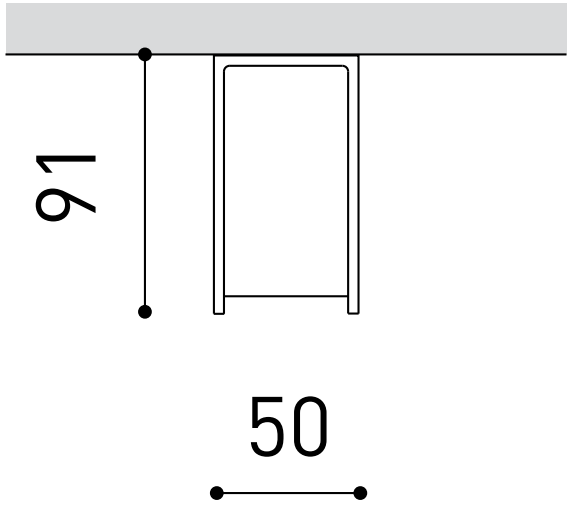
91
50